PC EXHIBIT C

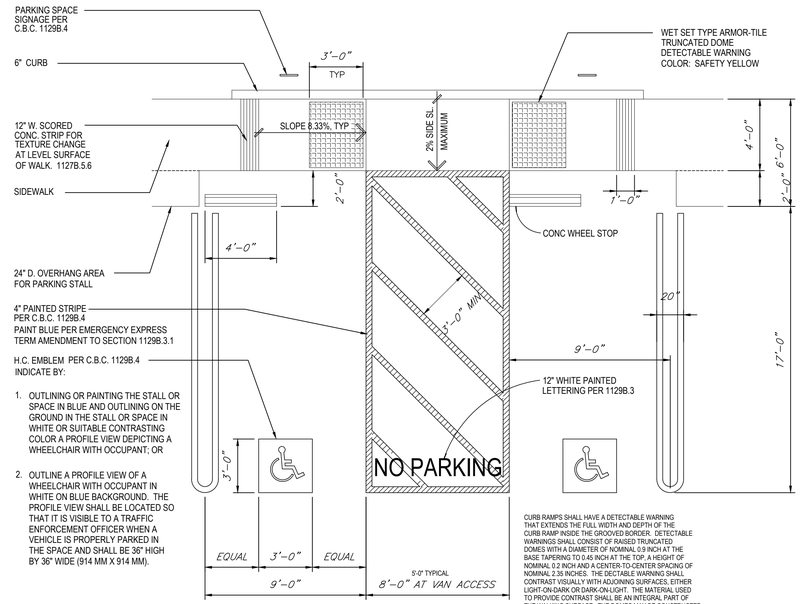

10 HANDICAP PARKING STALL
NO SCALE

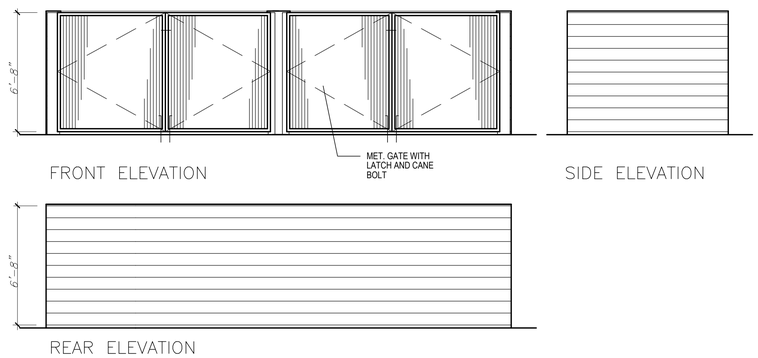

4 TRASH ENCLOSURE ELEVATIONS
1"=1'-0"

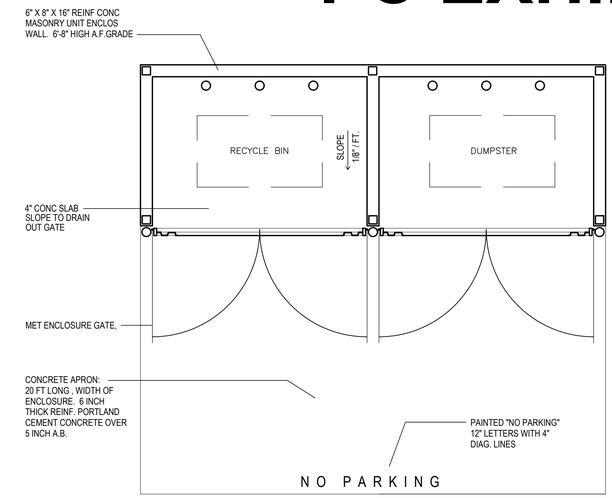

1 TRASH ENCLOSURE PLAN
1/4"=1'-0"

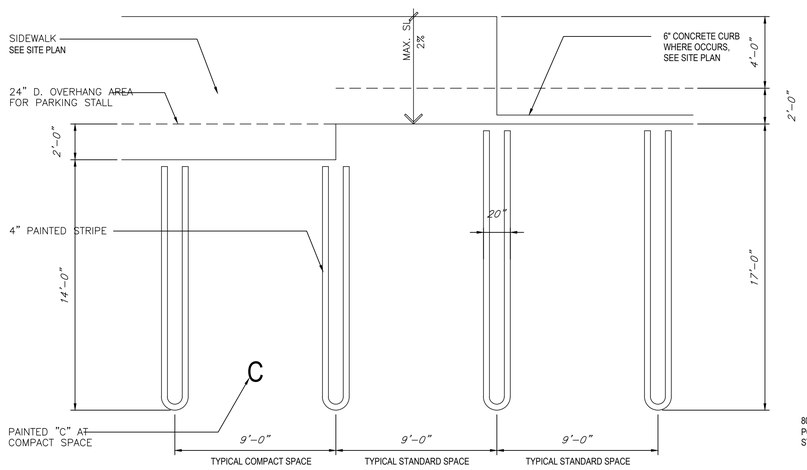

11 STANDARD AND COMPACT PARKING STALL STRIPING
NO SCALE

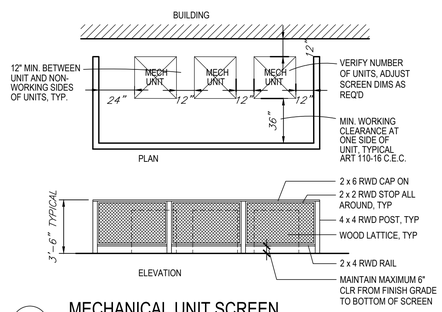

7 MECHANICAL UNIT SCREEN
NO SCALE

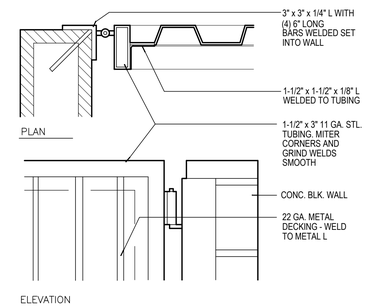

5 ENCLOSURE GATE
1-1/2"=1'-0"

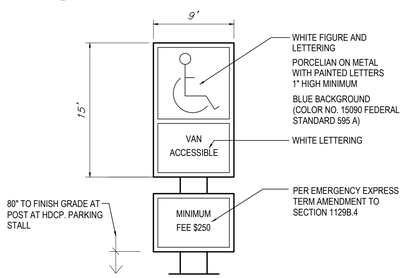

8 VAN ACCESSIBLE SIGNAGE
1-1/2"=1'-0"

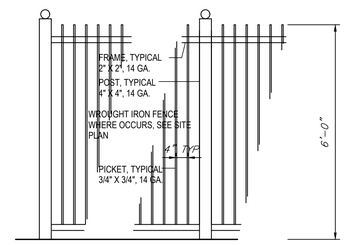

2 WROUGHT IRON FENCE
1/4" = 1'-0"

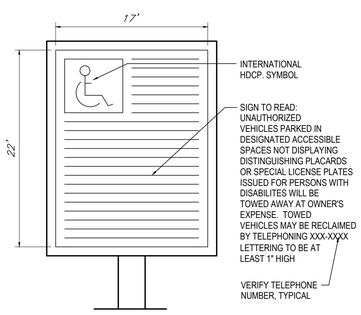

9 ACCESSIBLE PARKING SIGNAGE
1-1/2"=1'-0"

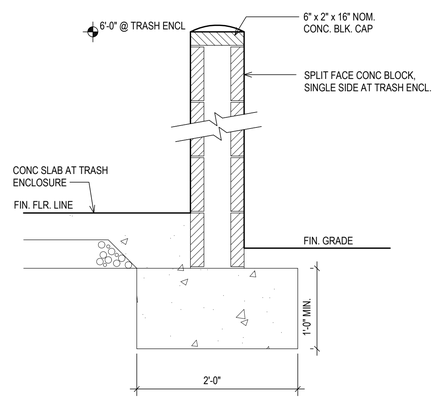

6 TRASH ENCLOSURE
1-1/2"=1'-0"

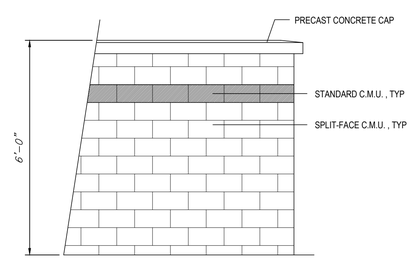

3 C.M.U. WALL
NO SCALE

GRABER - RASMUSSEN
a r c h i t e c t s
1725 J Street
Sacramento, CA 95811
916.444.6962
graber-rasmussen.com

MOURIER M31 APARTMENTS
80 UNIT APARTMENT PROJECT

WOOCREEK OAKS BLVD.
ROSEVILLE, CALIFORNIA

DRAWING DATE APRIL 2, 2019

REVISION

DATE OF ISSUE

S 1.1